Product Name	Up and Down Wall Light — Black Aluminium Outdoor Cube
Style	Modern geometric
Power Supply	Hardwired · AC 220–240V, 50Hz



A compact black aluminium wall light that casts crisp beams down, or up and down, across walls beside doors, paths and patios.

Single or double beam, with or without a 3 m motion sensor. COB LED with lens, 4000K neutral white, CRI 80, head rotates up to 180°.

IP65 sealed for outdoor weather. Hardwired by a licensed electrician and run from your wall switch.







Basic Product Information



Product Code	AVD-UDCL
Product Type	Outdoor up and down wall light
Power Supply	Hardwired · AC 220–240V, 50Hz
Product Colour	Black







Product Details

Material	Aluminium

Core Specifications

Height	12.4 cm
Width	6.6 cm
Depth	8.1 cm

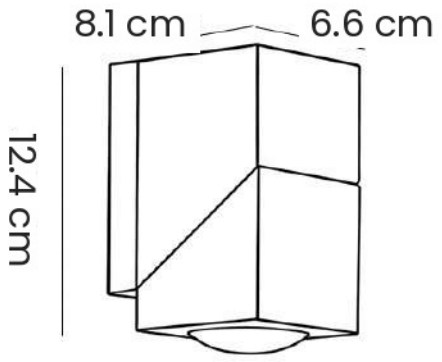

Basic Product Information



Product Code	AVD-UDCL
Product Type	Outdoor up and down wall light
Power Supply	Hardwired · AC 220–240V, 50Hz
Product Colour	Black







Product Details

Material	Aluminium

Core Specifications

Height	17.5 cm
Width	6.6 cm
Depth	8.1 cm

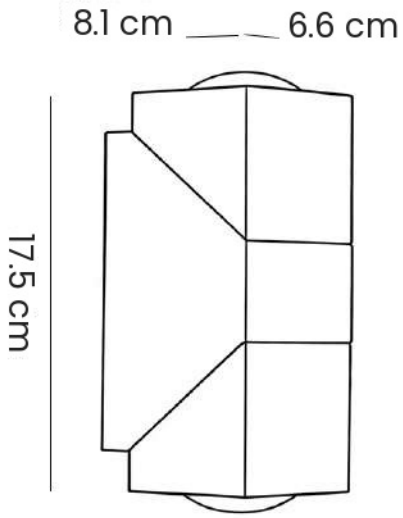





Voltage	AC 220–240V, 50Hz
Light Source Type	COB LED
Light Source Included	Yes
Colour Temperature	4000K
Dimmable	No
CRI	80
IP Rating	IP65

Quality Check & Installation









Installation Method	Wall mounted — fix the base to the wall; wiring by a licensed electrician, then attach the lamp body.
Application Scenarios	Corridors, Garden, Park, Villa, Yard
Colour Options	Neutral