Product Name	Square Pillar Light — Ribbed Glass Post Cap Light
Style	Modern
Power Supply	Solar powered, or hardwired · AC 220–240V, 50Hz



A square pillar light with a black painted metal frame and clear ribbed glass on all four sides, giving a soft, layered glow over gates and garden walls.

Choose 25, 30, 40, 50 or 60 cm widths, in a 4W solar version with a panel in the lid or a 24W hardwired version for AC 220–240V mains.

Warm white or three-colour (3000K/4500K/6000K) light, depending on version, suits garden paths, gates, courtyard entrances and lawn edges; a remote control is included.







Basic Product Information



Product Code	AVD-RGPL
Product Type	Pillar Lights
Power Supply	Solar Powered
Product Colour	Black







Product Details

Material	Metal, black painted finish

Core Specifications

Height	18 cm
Width	25 cm
Depth	25 cm

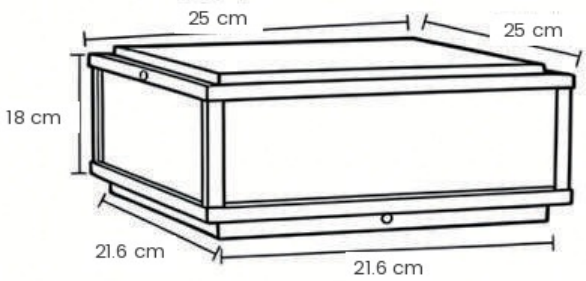

Basic Product Information



Product Code	AVD-RGPL
Product Type	Pillar Lights
Power Supply	Solar Powered
Product Colour	Black







Product Details

Material	Metal, black painted finish

Core Specifications

Height	18 cm
Width	30 cm
Depth	30 cm

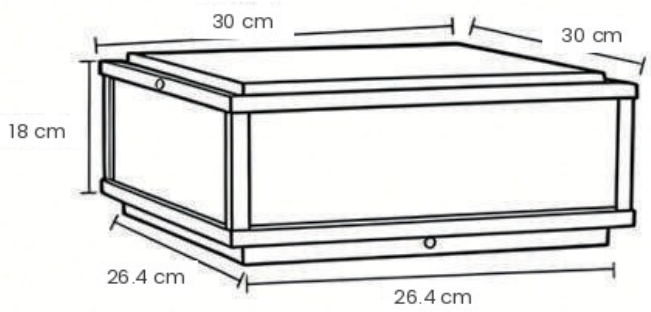

Basic Product Information



Product Code	AVD-RGPL
Product Type	Pillar Lights
Power Supply	Solar Powered
Product Colour	Black







Product Details

Material	Metal, black painted finish

Core Specifications

Height	18 cm
Width	40 cm
Depth	40 cm

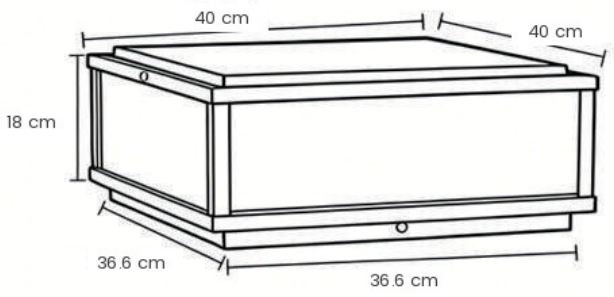

Basic Product Information



Product Code	AVD-RGPL
Product Type	Pillar Lights
Power Supply	Hardwired · AC 220–240V, 50Hz
Product Colour	Black







Product Details

Material	Metal, black painted finish

Core Specifications

Height	18 cm
Width	25 cm
Depth	25 cm

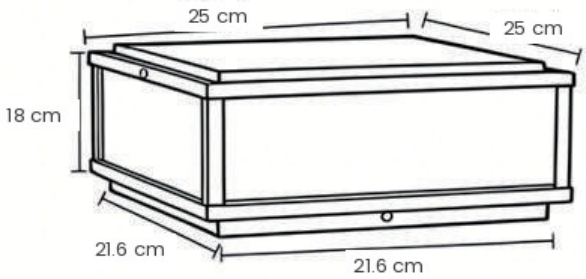

Basic Product Information



Product Code	AVD-RGPL
Product Type	Pillar Lights
Power Supply	Hardwired · AC 220–240V, 50Hz
Product Colour	Black







Product Details

Material	Metal, black painted finish

Core Specifications

Height	18 cm
Width	30 cm
Depth	30 cm

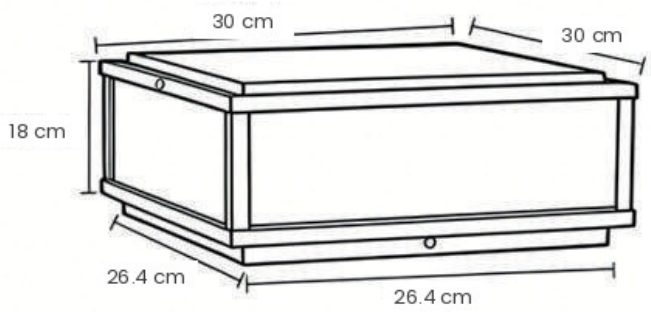

Basic Product Information



Product Code	AVD-RGPL
Product Type	Pillar Lights
Power Supply	Hardwired · AC 220–240V, 50Hz
Product Colour	Black







Product Details

Material	Metal, black painted finish

Core Specifications

Height	18 cm
Width	40 cm
Depth	40 cm

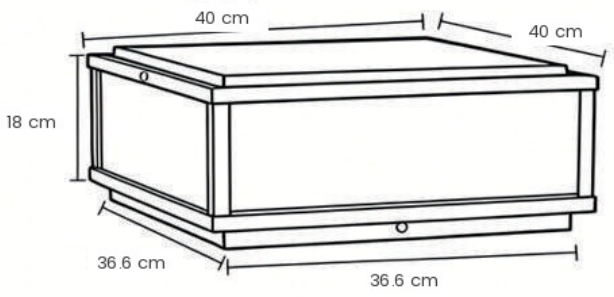

Basic Product Information



Product Code	AVD-RGPL
Product Type	Pillar Lights
Power Supply	Solar Powered
Product Colour	Black







Product Details

Material	Metal, black painted finish

Core Specifications

Height	25 cm
Width	50 cm
Depth	50 cm

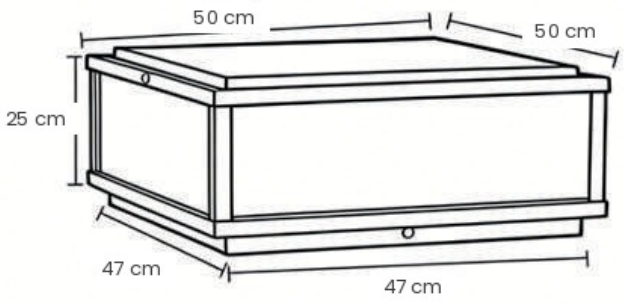

Basic Product Information



Product Code	AVD-RGPL
Product Type	Pillar Lights
Power Supply	Hardwired · AC 220–240V, 50Hz
Product Colour	Black







Product Details

Material	Metal, black painted finish

Core Specifications

Height	25 cm
Width	50 cm
Depth	50 cm

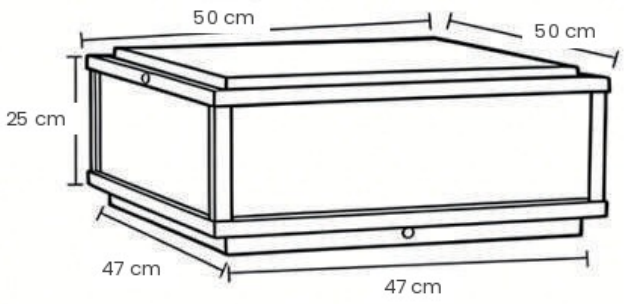

Basic Product Information



Product Code	AVD-RGPL
Product Type	Pillar Lights
Power Supply	Solar Powered
Product Colour	Black







Product Details

Material	Metal, black painted finish

Core Specifications

Height	35 cm
Width	60 cm
Depth	60 cm

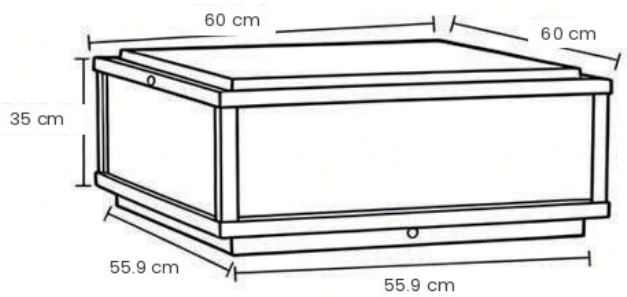

Basic Product Information



Product Code	AVD-RGPL
Product Type	Pillar Lights
Power Supply	Hardwired · AC 220–240V, 50Hz
Product Colour	Black







Product Details

Material	Metal, black painted finish

Core Specifications

Height	35 cm
Width	60 cm
Depth	60 cm

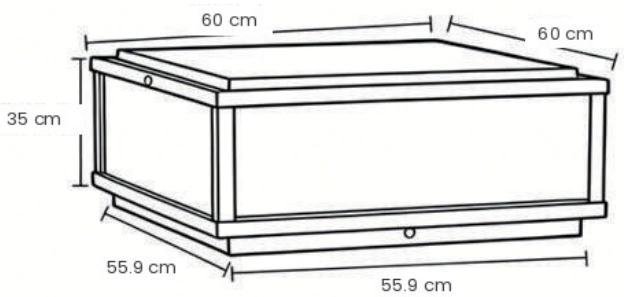





Voltage	AC 220–240V, 50Hz
Light Source Type	LED E27 Bulb
Colour Temperature	3000–6000K

Wiring — licensed electrician required

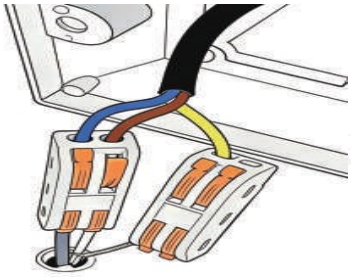

Blue: Neutral

Brown: Active

Green/Yellow: Earth

Quality Check & Installation









Installation Method	Surface mount: sits flat on a pillar, post or wall top, fixed with the screws supplied. Hardwired: licensed electrician.
Application Scenarios	Garden, Gate, Outdoor
Colour Options	Three-colour (3000K/4500K/6000K) or Warm White (3000K)
Product Accessories	Fixture ×1, Remote ×1, Screw Pack ×1