Product Name	Oslo Backlit Wall Light — Nordic LED Sconce
Style	Modern minimalist
Power Supply	Hardwired · AC 220–240V, 50Hz



A sculptural aluminium wall sconce that leans gently from the wall and washes it in a soft halo of warm backlight.

Rounded or square top, in black or white, with an acrylic diffuser and a slim wall base. Indoor use.

Integrated 5W LED, about 350 lumens of warm white (3000K) light. Hardwired by a licensed electrician.







Basic Product Information



Product Code	AVD-OSBW
Product Type	Backlit wall sconce
Power Supply	Hardwired · AC 220–240V, 50Hz
Product Colour	Black







Product Details

Material	Aluminium, acrylic diffuser

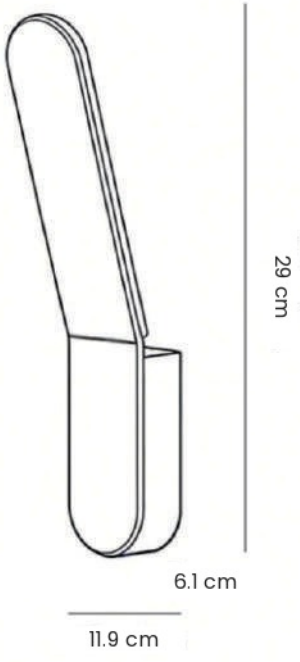

Core Specifications

Height	29 cm
Width	8–12 cm (by shape)
Depth	6.1 cm

Basic Product Information



Product Code	AVD-OSBW
Product Type	Backlit wall sconce
Power Supply	Hardwired · AC 220–240V, 50Hz
Product Colour	White







Product Details

Material	Aluminium, acrylic diffuser

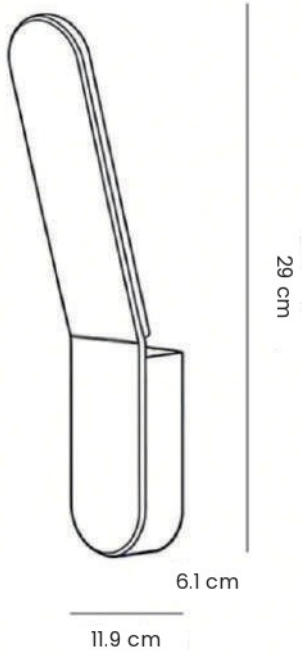

Core Specifications

Height	29 cm
Width	8–12 cm (by shape)
Depth	6.1 cm

Basic Product Information



Product Code	AVD-OSBW
Product Type	Backlit wall sconce
Power Supply	Hardwired · AC 220–240V, 50Hz
Product Colour	Black







Product Details

Material	Aluminium, acrylic diffuser

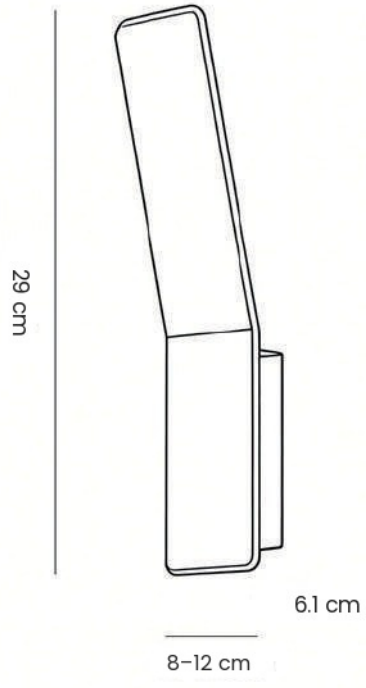

Core Specifications

Height	29 cm
Width	8–12 cm (by shape)
Depth	6.1 cm

Basic Product Information



Product Code	AVD-OSBW
Product Type	Backlit wall sconce
Power Supply	Hardwired · AC 220–240V, 50Hz
Product Colour	White







Product Details

Material	Aluminium, acrylic diffuser

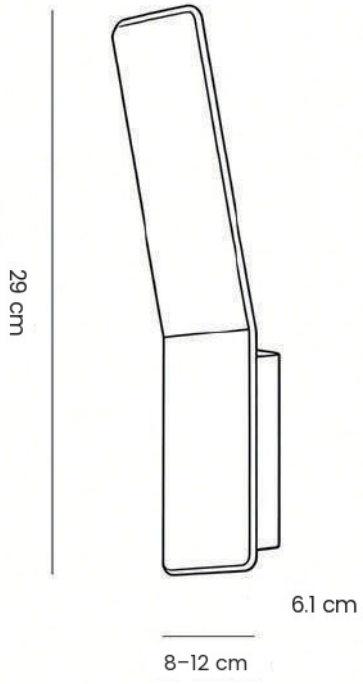

Core Specifications

Height	29 cm
Width	8–12 cm (by shape)
Depth	6.1 cm





Voltage	AC 220–240V, 50Hz
Light Source Type	LED
Light Source Included	Yes
Colour Temperature	3000K
Dimmable	No

Wiring — licensed electrician required

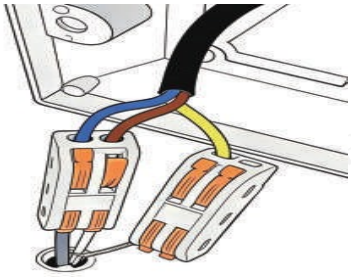

Blue: Neutral

Brown: Active

Green/Yellow: Earth

Quality Check & Installation









Installation Method	Wall mounted — fix the base to the wall, wire it, then fit the lamp body (licensed electrician).
Application Scenarios	Bedrooms, living rooms, stairs, hallways
Colour Options	Warm White (3000K)
Product Accessories	Light fixture ×1, screw pack ×1